| REV | ECN NO | DESCRIPTION | DRN | APP'D | DATE |
|---|---|---|---|---|---|
| | | | | | |
| | | | | | |
| | | | | | |
| | | | | | |
| | | | | | |

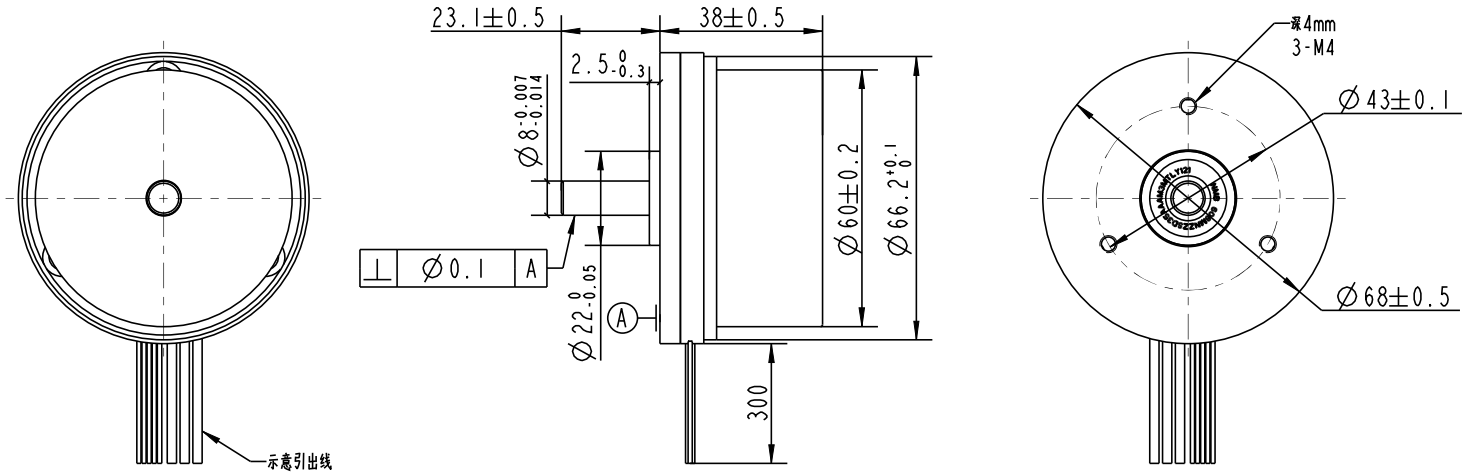


THREE-PHASE CONNECTING
STAR CONNECTION

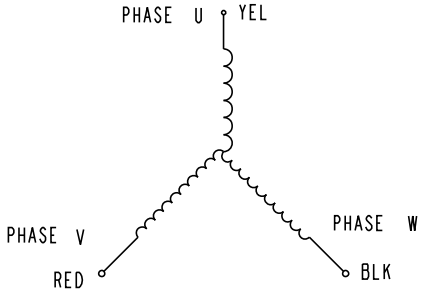


电机转向：CW

HALL CONNECTING

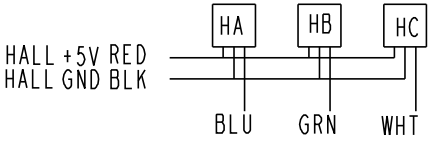


| | | |
|---|---|---|
| NUMBER OF PHASE | 绕组相数 | 3 |
| NUMBER OF POLES | 极数 | 14 |
| LINE TO LINE RESISTANCE | 线电阻 | 0.25±10% ohms@20°C |
| LINE TO LINE INDUCTANCE | 线电感 | 0.2±20% mH@1kHz |
| NOMINAL VOLTAGE | 额定电压 | 24 VDC |
| NO LOAD SPEED | 空载转速 | 4400±10% RPM |
| NO LOAD CURRENT | 空载电流 | 0.65 A REF |
| RATED TORQUE | 额定转矩 | 290 mN.m |
| RATED SPEED | 额定转速 | 3700±10% RPM |
| RATED CURRENT | 额定电流 | 5.6 A |
| PEAK TORQUE | 峰值转矩 | 870 mN.m |
| PEAK CURRENT | 峰值电流 | 17.0 A |
| BACK EMF CONSTANT | 反电势常数 | 4.0±10% Vrms/kRPM |
| TORQUE CONSTANT | 转矩常数 | 52 mN.m/A |
| INSULATION CLASS | 绝缘等级 | B 130°C |
| DIELECTRIC STRENG | 介电强度 | 600VAC 1SEC |
| INSULATION RESIST | 绝缘电阻 | 100MOhm @500VDC |
| ROTOR INERTIA | 转子转动惯量 | 1000g.cm² |
| WEIGHT | 重量 | 0.5Kg REF |
| OPERATION AMBIENT | 使用环境 | Ambient temperature:-25...+55°C,humidity Max.85%(No condensation) |
| STORAGE AMBIENT | 存储环境 | Ambient temperature:-25...+85°C,humidity Max.85%(No condensation) |

Wires for Phases UL1332 AWG18

| PHASE U | PHASE V | PHASE W |
|---|---|---|
| YEL | RED | BLK |

Wires for Hall UL1332 AWG26

| HALL Vc | Hu | Hv | Hw | HALL Gnd |
|---|---|---|---|---|
| RED | BLU | GRN | WHT | BLK |

PERMISSIBLE RADIAL+AXIAL FORCE

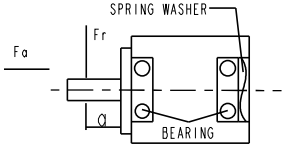


| | | |
|---|---|---|
| AXIAL-FORCE | 轴向压力 | Fa=10 N Max |
| DISTANCE | 距离 | a=10 mm |
| RADIAL-FORCE | 径向压力 | Fr=28 N Max |
| SHAFT RADIAL PLAY | 径向间隙 | 0.02mm Max.@4N |
| SHAFT AXIAL PLAY | 轴向间隙 | 0.14mm Max.@4N |

| REV | ECN NO. | DESCRIPTION |
|---|---|---|
| A | | |

UNLESS OTHERWISE SPECIFIED TOLERANCES:
DECIMALS: .X ±0.5, .XX ±0.25, .XXX ±0.1
ANGULAR: ±0°30′
UNIT: mm
DO NOT SCALE DRAWING

MATERIAL | CONTR. | DESIGN | DATE | CHECK | APPD

FIRST ANGLE PROJECTION

SCALE 1:1
SHEET 1 OF 1

P/N. 3.1.02.060.00**
TITLE Specifications
USED ON FL60BLW38-24V-37110A-1
DWG NO. A

FULLING MOTOR